LIMITED WARRANTY
All equipment which is sold under ANVIL trademark and used for commercial purposes is warranted against defects in materials and workmanship. The warranty runs for two years from the date of original installation and is for the benefit of the original purchaser only. All other Warranties ,expressed or implied , statutory or otherwise, including without limitations any implied Warranty of Merchantability or fitness for purpose are excluded .The Seller shall in no event be liable for direct,indirect or consequential damages in connection with ANVIL commercial products.

The Sellers obligation under this Warranty is limited to the repair of defects without charge. Defective units must be taken or shipped,transportation charges prepaid,to ANVIL.

This Warranty is not effective if damage occurs because of accident,carelessness,improper installation,lack of proper set-up,supervision when required or if the equipment is installed or operated in any manner contrary to the installation and operating instructions. In these cases,repairs will be made at a reasonable cost. Work performed by unauthorized personnel or unauthorized service agencies using non Anvil spares voids this Warranty.

NB:

REGISTER ON-LINE TODAY
Register your warranty on-line now at www.anvilworld.com

NO WEB ACCESS
If you do not have access to the Web. Kindly register by completing the warranty registration form and fax it to the ANVIL office in the country of purchase.

Failure to do so will invalidate your warranty.

DEEP FAT FRYER GAS
SINGLE AND DOUBLE PAN

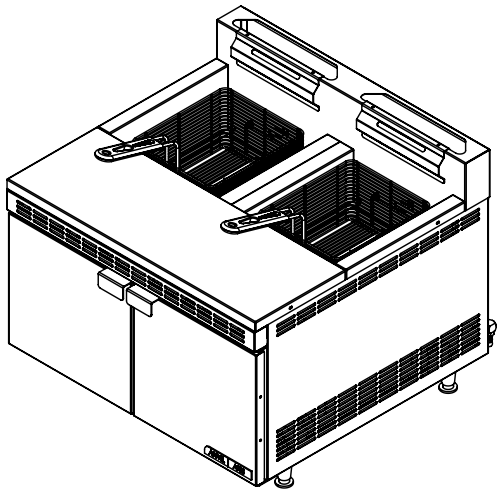

INSTALLATION, OPERATION AND CARE OF
DEEP FAT FRYER GAS - SINGLE AND DOUBLE PAN
MODELS: FFA4110-R01/FFA4120-R01

IMPORTANT:
READ THESE INSTRUCTIONS FOR USE CAREFULLY SO AS TO FAMILIARIZE YOURSELF WITH THE APPLIANCE BEFORE CONNECTING IT TO ITS GAS CONTAINER. KEEP THESE INSTRUCTIONS FOR FUTURE REFERENCE.

UNPACKING

Unpack the product and check for any damage incurred during transit. This should be reported to the responsible carrier, railway or postal authority, and a request for a damage report should be made.

THESE INSTRUCTIONS MUST BE FOLLOWED FOR US TO GUARANTEE OUR FULL SUPPORT OF YOUR CLAIM FOR PROTECTING AGAINST LOSS FROM CONCEALED DAMAGE. THE FORM FOR FILING SUCH A CLAIM WILL BE PROVIDED BY THE CARRIER.

- The fryers contained in this document are intended for use with LPG at a pressure of 2.8kPa or NG at a pressure of 2.0 kPa when all burners are on.
- The regulators used with the grills must comply with SANS 1237 and must be approved by the LPGASA and must be certified for operation at 2.8kPa for LPG and 2.0 kPa for NG.
- The hoses used with the grills must comply with SANS 1156-2 and must be approved by the LPGASA.

GENERAL INSTALLATION AND OPERATION INSTRUCTIONS

1. This appliance should only be used in a WELL – VENTILATED ROOM. Adequate ventilation allows for the removal of the products of combustion and allows the entry of replacement air.
2. This appliance has a factory set fixed primary air intake and no adjustment is necessary. No adjustments to jets or air intakes should be undertaken unless carried out by a factory approved agent.
3. The Installation of appliances may only be carried out by a registered installer and such installations shall comply with the requirements of SANS 10088-1
4. Make sure that all connections are gas tight by brushing with a soapy water or liquid detergent (a gas leak will form bubbles). If bubbles form, close cylinder valve and hand tighten all fittings again. IF BUBBLES STILL FORM, DO NOT USE THE APPLIANCE. Have a dealer check the appliance.

THIS APPLIANCE MUST NOT BE USED IN BASEMENTS OR IN ROOMS LESS THAN 15 CUBIC METRES IN VOLUME. (TYPICALLY 2.6M SQUARE)

CONNECTING THE FRYER TO THE GAS REGULATOR

(Check O rings and neoprene seals on the regulator)

1. Support regulator with one hand while aligning the regulator bull nose (threadedpart) with the threaded gas outlet on cylinder valve.
2. Screw regulator handwheel ANTI – CLOCKWISE (LEFT - HAND THREAD) into gas outlet.
3. Tighten regulator handwheel as tight as possible by hand only.
4. DO NOT USE TOOLS OR LEVERS TO TIGHTEN.
5. When connecting the regulator to the gas cylinder, avoid undue twisting of the flexible hose. Open cylinder valve by turning hard wheel anti – clockwise.
6. Make sure that all connections are gas tight by brushing with a soapy water or liquid detergent (a gas leak will form bubbles). If bubbles form, close cylinder valve and hand tighten all fittings again. IF BUBBLES STILL FORM, DO NOT USE FRYER. Have a dealer check the appliance.
7. To light the unit, start by opening the door for whichever tank needs to be lit.
8. When igniting the burner, turn the control valve knob to the 'pilot' position. To light the burner, press the control valve knob for ± 10 seconds, then ignite the pilot manually using a long neck lighter. The control valve knob must remain in the depressed position for at least 10 seconds after ignition has occurred in order for the safety thermocouple to activate. Thereafter, set the control valve to the desired heat between 90°C and 200°C on the scale.
9. In the case of a double pan fryer repeat the process above to ignite the other burner.
10. This fryer is equipped with a flame failure device. Should the flame fail for whatever reason, the gas supply to the burners will shutdown automatically within 30 seconds of flame failure.
11. In the event of burn back, where the flame burns back and ignites at the jet, immediately turn off the gas supply by first closing the control valve on the gas cylinder and then the appliance valve. After the flame is extinguished, remove the regulator and check the condition of its seal, replace the seal if in doubt. Re-light the appliance as described in Section 7 above. Should the flame light back persistently, return the product to your authorized ANVIL repair agent.

12. To re-light the burner, follow the procedure as in paragraph 7 above.
13. To switch off this appliance, turn the control knobs to the 'OFF' position and close the valve on the gas cylinder by turning the hand wheel in a CLOCK WISE direction.
14. This fryer is provided with adjustable levelling feet.
15. Fill the tank insert with the correct volume of cooking oil. En sure that the oil level is at the engraved LOW (L) marking inside the tank. Do not overfill unit.
16. Do not overfill the basket and carefully load the product into the hot oil. A danger of surge boiling can also occur if the food to be fried is excessively wet or if the frying basket is too full.
17. **To Drain the fryer attach the drain valve, found mounted to the inside of the door, to the ball valve of the required tank to drain. Once the drain pipe is secured, turn the ball valve handle ANTI-Clockwise, to drain the tank.**
18. Repeat step 17 to drain the second tank, in the case of the double pan fryer.
19. Install an automatic fire extinguisher over the fryer and in the exhaust duct.Never direct such extinguishers so as to blow the oil out of the container
20. A danger of fire exists if the oil level is below the minimum indicated level.
21. Keep areas and filters clean above the fryer – oil soaked lint or dust can ignite easily and flames will spread rapidly.
22. It is dangerous to use old oil as this can reduce the flash point and cause surge boiling.
23. Hot oil is flammable – keep open flames away from it and its vapours.
24. Do not leave unit in operation without an attendant..
25. Never allow a water jet into the hot oil, it can explode!!!!

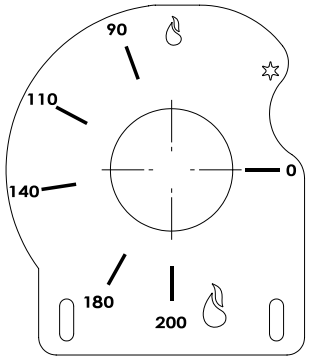

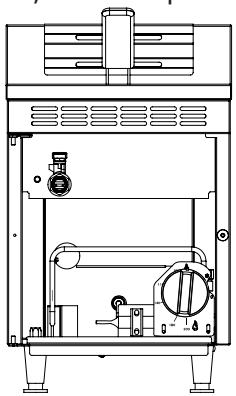

DOUBLE GAS FRYER
MODEL CODE : FFA4120-R01
EXPLODED LEGEND REV.0

Part No.	Stock Code	Description
1	82-SPGF-SS-BSKTH	BASKET HOLDER
2	82-DPGF-SS-TNKAS	TANK ASSEMBLY
3	7-LPBURN-FFA4210	BURNER ASSEMBLY
4	7-REG-ADP	ANGLE BRASS CONNECTOR
5	7-MAN-FFA4120	BURNER MANIFOLD ASSEMBLY
6	82-NGC-SS-MCLMP	MANIFOLD CLAMP
7	82-STGF-SS-BMFDB	BURNER MANIFOLD BRACKET
8	7-COMP-NUT-FFAC	12 X 1 THREAD FFA3010-CE
9	7-OLIVE-FFA3010	1/4 OLIVE FFA3010-CE
10	6-AD-FFA3010CE / 6-ADP-FFA3010CE	1/8 - 1/8 ADAPTER / 1/8 - 1/4 ADAPTER
11	6-ELB-FFA3010CE	6mm - COMPRESSION - 1/8 ELBOW NUT
12	82-SPGF-SS-RSDE	RHS PANEL
13	9-6.0MM-C/TUBE	6mm COPPER TUBE
14	82-DTGF-SS-THING	TOP RIGHT HINGE ASSEMBLY
15	82-DTGF-SS-BHING	BOTTOM RIGHT HINGE ASSEMBLY
16	82-DPGF-MS-BASS	DOUBLE BASE PLATE
17	82-DTGF-SS-FTSUP	FOOT SUPPORT DOUBLE GAS FRYER
18	7-FOOT-FTA7016	AJUSTABLE FOOT
19	4-DL-L-AXIS	AXIS DOMED LOGO
20	82-STGF-SS-DOOR/82-STGF-MS-DRINR/ 82-STGF-SS-DHNDL	DOOR ASSEMBLY
21	82-STFG-SS-CKBKT	CONTROL KNOB BRACKET
22	7-MAG-COA1005	ROUND MAGNET
23	82-STFG-SS-CNTLF	CONTROL KNOB FACIA
24	82-DPGF-SS-FSUP	FRONT SUPPORT DOUBLE GAS FRYER
25	82-DPGF-MS-CNTRC	FFA4220 DOUBLE GAS CENTER COLUMN
26	3-KNOB-APEX	CONTROL KNOB
27	82-SPGF-SS-LSDE	LHS PANEL
28	82-SFGF-SS-BHING	BOTTOM HINGE ASSEMBLY
29	7-TC-FFA4010	THERMO COUPLE
30	82-STGF-SS-THING	TOP HINGE ASSEMBLY
31	7-PA-FFA3010	PILOT BURNER
32	82-STGF-MS-BURBKT	BURNER BRACKET
33	6-ADP-FGR0900	FGR0900 ADP 1/4COMP - 1/4 MALE
34	82-SPGF-MS-FDASS	FLAME DEFLECTOR
35	7-VAL-FFA4110	GAS FRYER VALVE ABJC WITH 1/4"
36	7-BV-FFA1002	1/2" BSP BALL VALVE GALVANIZE
37	FFB2250	FRYER BASKET
38	6-DTUBE-FFA4210	DRAIN PIPE 1/2" MS PLATED

EXPLODED DIAGRAM
DEEP FAT FRYER GAS - DOUBLE PAN
FFA4120-R01

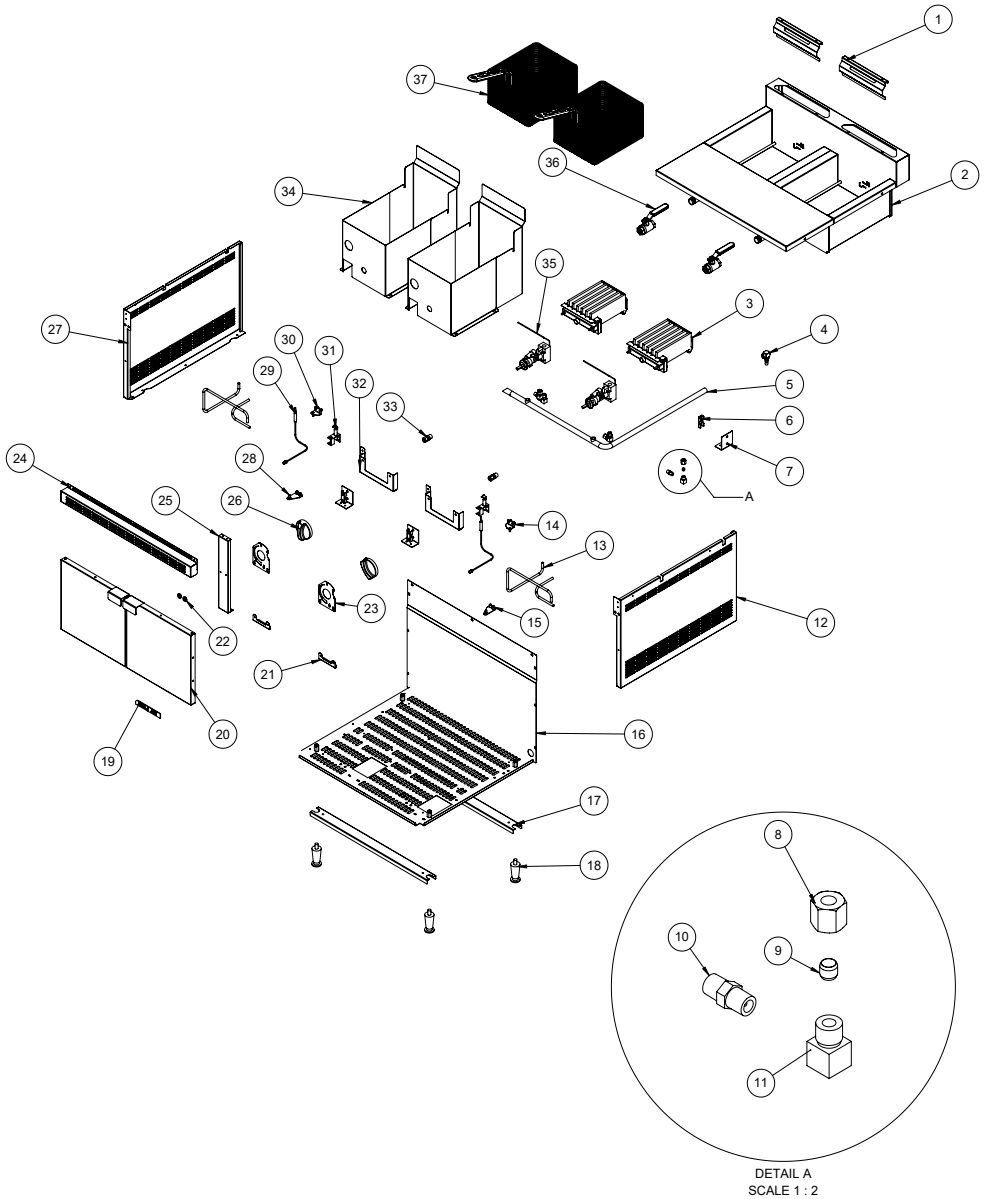

TIP : COOKING AT A HIGHER TEMPERATURE WILL NOT REDUCE YOUR COOKING TIME ! IT WILL PRODUCE UNSATISFACTORY RESULTS.

COOKING TIPS

Cooking is not an exact science. Due to many variables such as fryer size and quantity of food, temperature of food when first put in the unit, etc.
These simple steps will help to make your chips/fries the best:

1. **Cook chips from a frozen state** - For the best texture and flavour, be sure chips are completely frozen until required for cooking.
2. **Never fill basket more than half full** - Overfilling will result in greasy, soggy chips. Carefully lower basket into oil ensuring that all chips are covered.
3. **Shake basket 30 seconds into fry** - Lift the basket after 30 seconds of fry time and shake it gently to break up clusters and cook chips evenly.
4. **Fry for the correct length of time** - Please read chip carton for the ideal frying time. Oil must be at 180°C (370ºF)
5. **Drain chips for 10 seconds after cooking** - When chips are cooked, drain them over the fryer for 10 seconds to remove ex cess oil before transferring to the holding area.
6. **Avoid piling cooked chips more than two layers on a chip dump** - Chips that are piled too high will steam themselves and go soggy very quickly.
7. **Keep hold time to a minimum** - Keep regular chips under the chip warmer for no more than 7 minutes.

OIL TIPS

1. **Start with a high quality oil** - A low quality oil deteriorates faster, and over time transfers flavours to other fried foods.
2. **Keep oil at 180°C (370ºF)** - Use a reliable thermometer to ensure oil is at correct temperature at all times to deliver a crispy, golden chip.
3. **Change oil every 7 to 10 days** - Change more often if the oil has been contaminated by other elements such as salt or water.
4. **Skim oil often and filter it daily** - Be sure to skim the oil be tween frying to extend its life and filter it every day.
5. **Use a clean, well-maintained fryer** - Keep your fryer clean and in good working order to sustain higher frying performance.

SINGLE GAS FRYER
MODEL CODE : FFA4110-R01
EXPLODED LEGEND REV.0

Part No.	Stock Code	Description
1	82-SPGF-SS-BSKTH	BASKET HOLDER
2	82-SPGF-SS-TNKAS	TANK ASSEMBLY
3	7-PA-FFA3010	PILOT BURNER
4	7-TC-FFA4010	THERMO COUPLE
5	7-REG-ADP	ANGLE BRASS CONNECTOR
6	7-MAN-FFA4110	BURNER MANIFOLD ASSEMBLY
7	82-NGC-SS-MCLMP	MANIFOLD CLAMP
8	82-STGF-MS-BURBK	BURNER MANIFOLD BRACKET
9	7-COMP-NUT-FFAC	12 X 1 THREAD FFA3010-CE
10	6-ELB-FFA3010CE	6mm - COMPRESSION - 1/8 ELBOW NUT
11	7-OLIVE-FFA3010	1/4 OLIVE FFA3010-CE
12	6-AD-FFA3010CE / 6-ADP-FFA3010CE	1/8 - 1/8 ADAPTER / 1/8 - 1/4 ADAPTER
13	82-SPGF-SS-RSDE	RHS PANEL
14	82-SPGF-MS-BASS	SINGLE BASE PLATE
15	82-STGF-SS-FTSUP	FOOT SUPPORT SINGLE GAS FRYER
16	7-FOOT-FTA7016	AJUSTABLE FOOT
17	4-DL-M-ANVIL	AXIS DOMED LOGO
18	7-MAG-COA1005	ROUND MAGNET
19	82-STGF-SS-CKBKT	CONTROL KNOB BRACKET
20	82-STGF-SS-CNTLF	CONTROL KNOB FACIA
21	82-STGF-SS-DOOR/82-STGF-MS-DRINR/ 82-STGF-SS-DHNDL	DOOR ASSEMBLY
22	82-SPGF-SS-FSUP	FRONT SUPPORT DOUBLE GAS FRYER
23	6-DTUBE-FFA4210	DRAIN PIPE 1/2" MS PLATED
24	82-STGF-SS-BHING	BOTTOM HINGE ASSEMBLY
25	3-KNOB-APEX	CONTROL KNOB
26	7-VAL-FFA4110	GAS FRYER VALVE ABJC WITH 1/4"
27	82-SPGF-MS-FDASS	FLAME DEFLECTOR
28	82-STGF-SS-THING	TOP HINGE ASSEMBLY
29	7-GV-FFA4110	1/2" GATE VALVE BRASS/PLATED
30	6-ADP-FGR0900	FGR0900 ADP 1/4COMP - 1/4 MALE
31	9-6.0MM-C/TUBE	6mm COPPER TUBE
32	82-STGF-MS-BURBKT	BURNER BRACKET
33	7-LPBURN-FFA4210	BURNER ASSEMBLY
34	82-SPGF-SS-LSDE	LHS PANEL
35	FFB2250	FRYER BASKET

EXPLODED DIAGRAM
DEEP FAT FRYER GAS - SINGLE PAN
FFA4110-R01

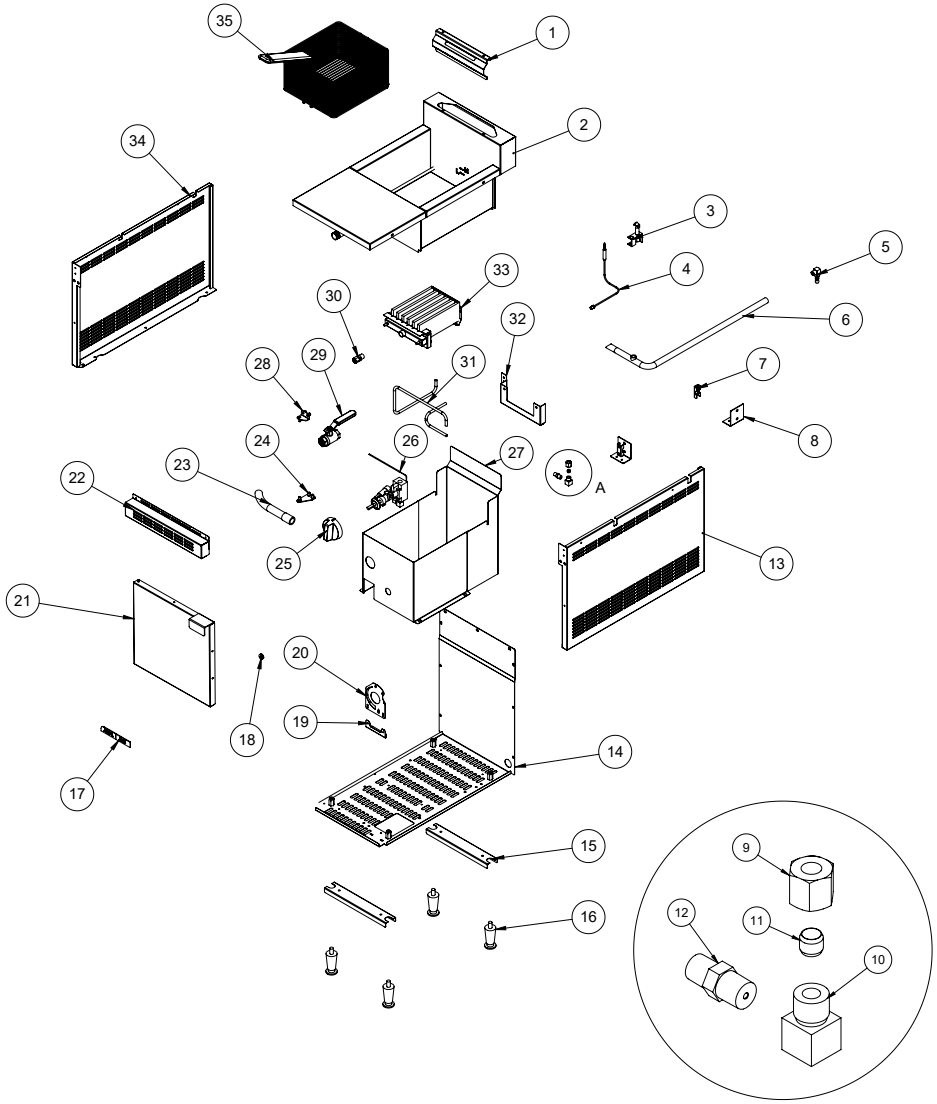

MAINTENANCE

There are no predetermined maintenance intervals for this appliance however the following should be observed.

1. Inspect hoses and replace if they are not in order, before us ing the appliance as cracked and perished hoses can be dangerous replace if necessary with hoses as detailed in point 5.
2. Allow the appliance to cool sufficiently before attempting any maintenance.
3. The appliance is fitted with a jet to regulate the correct amount of gas. The small hole in the jet may become blocked, result ing in a small flame or no flame on the burner. To clean, unscrew it from the appliance Clean the jet by blowing the hexagon end, or by using a jet cleaner. Do NOT attempt to clean the jet with a sharp object, as this will damage the very small jet aperture and cause the fryer to malfunction. If the jet still does not function, replace it with a new jet of the correct size. To re-assemble, reverse the above procedures.The same procedure applies if the pilot burner jet becomes blocked
4. Check that the flexible hose is completely connected over the nozzles at each end of the tubing and that it is held firmly in place by hose clamps. Examine the flexible hose regularly, at least each time the gas cylinder is changed and ask your dealer to fit a new LPG hose if it becomes perished, worn or damaged.
5. Only LPG hose that complies with SANS 1156-2 or BS 3212 may be used with this appliance.
6. **Trouble Shooting**

- A normal flame is blue and may have an orange or yellow tip. If the flame is completely yellow, it may be that the jet is not securely fitted. Re-tighten to give a gas tight seal. An over-filled gas cylinder can also cause large yellow flames. Cylinder should be returned to filling station and checked by weight.
- Check that the primary air supply apertures in the burners are clear and free of obstructions.
- If the flame power drops or the gas will not light, check that the gas cylinder still contains gas (shake to hear the noise made by the liquid).If there is still gas,the jet might have become blocked or partially blocked.
- If you suspect a blocked jet, follow the instruction in Section 3 above.

EMERGENCY DRILL:
It is recommended that commercial kitchens have a suitable placed and sized fire extinguisher.

NOTE: Keep kitchen clean, particularly from fatty build up, especially in the vent ducting, as this is frequently the point of ignition.

IF YOU SHOULD SMELL GAS:

* Turn off gas supply at cylinder.
* DO NOT switch electrical equipment ON or OFF
* Open all doors and windows to increase ventilation.
* Extinguish open flames
* Move cylinder outside if safe
* Look for leaks with soapy water
* No smoking

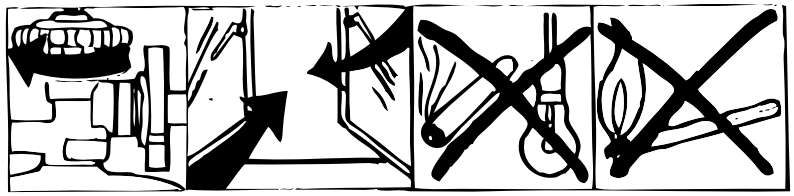

DESCRIPTION OF MODELS

MODEL	DESCRIPTION	POWER (BTU)	POWER (kW)
FFA4110-R01	SINGLE PAN GAS FRYER	21 445	6.28
FFA4120-R01	DOUBLE PAN GAS FRYER	42 890	12.57

JET SIZES - LPG		
PILOT BURNER JET	0.3mm	#83
BURNER JET	0.7mm	#70

JET SIZES - NG		
PILOT BURNER JET	0.45mm	#78
BURNER JET	1.0mm	#62

POSITIONING DIAGRAM
DEEP FAT FRYER GAS - DOUBLE PAN
FFA4120-R01

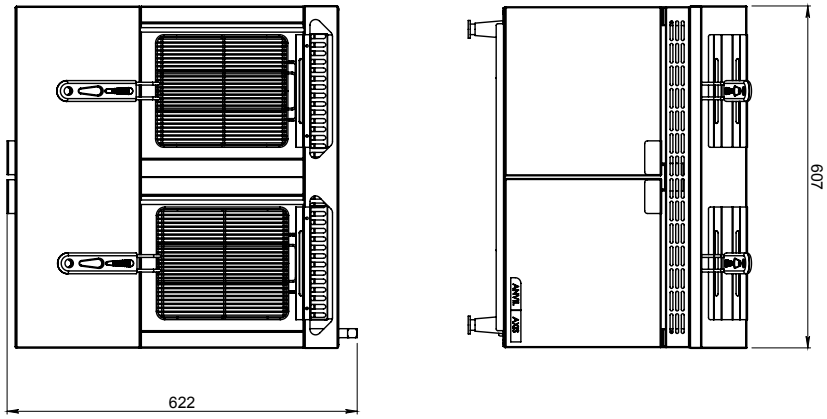

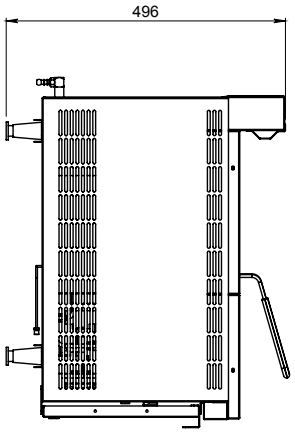

POSITIONING DIAGRAM
DEEP FAT FRYER GAS - SINGLE PAN
FFA4110-R01

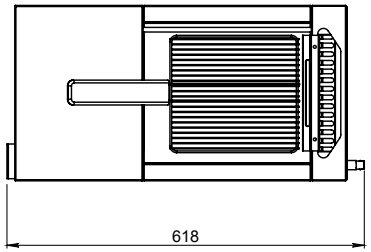

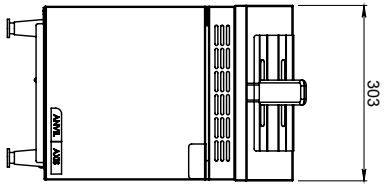

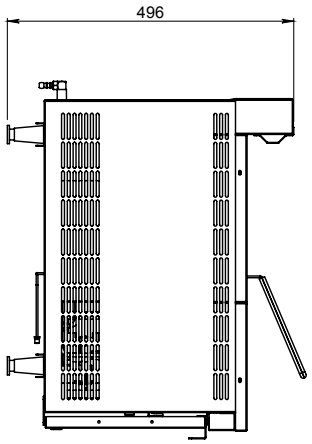

IMPORTANT INFORMATION FOR THE USER

This appliance may only be installed by a registered LP Gas installer. All registered installers are issued with a card carrying their registration number. Ask to be shown the card before allowing the installation to commence and make a note of the Installer QCC number. Upon completion of the installation, the installer is required to explain the operational details of the appliance together with the safety instructions. You will be asked to sign acceptance of the installation and be provided with a completion certificate. You should only sign acceptance of the installation when the installation is completed to your satisfaction. Note that your invoice is required in the event that you wish to make a guarantee claim.

IMPORTANT INFORMATION FOR THE INSTALLER

This appliance may only be installed by LP gas installer registered with the LPGASA .The appliance must be installed with the requirements of SANS10088-1 and any fire department regulation and/or local bylaws applicable to the area. If in doubt check with the relevant authority before undertaking the installation. Upon completion of the installation you are required to fully explain and demonstrate to the user the operational details and safety practises applicable to the appliance and the installation.

FIRE AT CYLINDERS

(A) Don't panic - Flames from joints near a cylinder are not dangerous in themselves, as long as they do not heat up the cylinder.

(B) If possible, close the cylinder valve using a wet cloth to protect your hand.

(C) Spray cold water onto cylinders exposed to the fire in order to keep them cool. Use a hose pipe. Keep people away from the area.

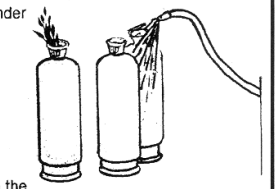

WARNING

Burn Hazard.
Do not touch hot food,liquid or heating surfaces while equipment is heating or operating

Hot surfaces and food can burn skin. Allow the hot surfaces to cool before handling

DAILY CLEANING AND MAINTENANCE

1. Remove large pieces of food residue from the oil,carefully skim surface.
2. Wash all exterior and interior surfaces with hot soapy water solution. DO NOT use harsh abrasives on any portion of the stainless or coated surfaces.

THIS APPLIANCE SHOULD NOT BE CLEANED WITH A WATER JET OR IMMERSED IN WATER.

CLEAN THE STAINLESS STEEL PARTS WITH WATER AND SOAP. AVOID THE USE OF DETERGENTS CONTAINING ABRASIVE SUBSTANCES. ALWAYS RINSE WELL AND DRY CAREFULLY AFTER CLEANING. DO NOT USE PRODUCTS CONTAINING AGGRESSIVE CHEMICALS, ACIDS OR PRODUCTS WITH CHLORINE TO CLEAN THE STAINLESS STEEL EVEN IF DILUTED

SAFETY

READ ALL INSTRUCTIONS BEFORE USE. FAILURE TO FOLLOW THESE PRECAUTIONS COULD RESULT IN INJURY TO YOURSELF AND OTHERS

1. When this appliance is to be positioned in close proximity to a wall, partitions, kitchen furniture, decorative finishes, etc. it is recommended that they be made of non-combustible material. If not, they shall be clad with a suitable non-combustible heat insulating material, and the closest attention be paid to fire prevention regulations.
2. Do not use an appliance that is damaged, leaking or which does not operate properly.
3. Ensure that the gas cylinder is connected or changed in well ventilated area,preferably outdoor, away from any source of ignition as open flames, and away from other people.
4. Keep gas cylinder away from heat and flames. Do not place on a stove or any other hot surface.
5. Ensure that the assembled unit is stable and does not rock.
6. Do not cover or change the primary air supply apertures in the burner as this will affect the performance of the product and may lead to unstable flames.
7. If there is a leak on your appliance (smell of gas), turn off the gas supply, first at the control valve on the cylinder and then on your appliance by turning the control knobs fully clockwise.
8. If you wish to check for leaks on your appliance, do it outside. Do not try to detect leaks using a flame. The correct way is to smear the joint with soapy water. If bubbles form, then there is a gas leak. Immediately turn off the gas supply first closing the control valve on the gas cylinder and then the appliance valves. Check that all the connections are properly filted. Recheck with soapy water. If a gas leak persists, return the product to your dealer for inspection/repair.
9. Do not modify the appliance or use it for anything other than what it has been designed.
10. During use, part of the appliance will become hot, particularly the cooking areas and top. Avoid touching hot parts with your bare hands. The use of oven gloves is recommended.
12. Keep young children away from the appliance at all times.
13. This appliance consumes oxygen and needs ventilation for optimum performance and for the safety of those in close proximity.